General

Read and keep operating instructions

These operating instructions belong to this FS-ARM 4040 cordless lawnmower (hereinafter only referred to as “lawnmower”). They contain important information on commissioning and handling.
Read through these operating instructions thoroughly, particularly the safety instructions, before using the lawnmower. Ignoring these operating instructions may result in serious injury or damage to the lawnmower.

The operating instructions are based on the standards and regulations applicable in the European Union. Please also comply with country-specific guidelines and laws abroad.

Keep the operating instructions for further use. If you pass the lawnmower on to a third party, be sure to include these operating instructions.

Explanation of symbols

The following symbols and signal words are used in these operating instructions, on the lawnmower or on the packaging.

This signal symbol/word indicates a hazard with a medium degree of risk which, if not avoided, could result in death or serious injury.

This signal symbol/word indicates a hazard with a low degree of risk which, if not avoided, could result in minor or serious injury.

NOTE!

This signal word warns of possible material damage.

This symbol gives you useful additional information on assembly or operation.

General warning symbol!

Read through the operating instructions before operation.

Declaration of conformity (see “Declaration of conformity” chapter): Products marked with this symbol comply with all applicable Community regulations of the European Economic Area.

Warning! Sharp blade! Maintain sufficient distance to the cutting blade during operation.

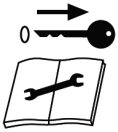

Switch off the lawn mower and remove the safety key before carrying out any adjustment or maintenance work.

Caution! The cutting blade is sharp. The cutting blades continue to rotate after the motor has been switched off. Wait until all rotating parts have come to a standstill.

Discharge of cuttings. Do not mow without the safety flap.

Attention: Keep away from bystanders (minimum distance: 5 metres).

Maximum sound power level of the lawn mower during operation.

Do not expose the lawnmower to rain or other adverse weather conditions and do not use it in a wet or damp atmosphere.

Old devices must not be disposed of with household waste! If the lawnmower can no longer be used,old devices must not be disposed of with household waste. If the lawnmower can no longer be used, please dispose of the device at an appropriate facility. Your Local Authority can advise where these facilities are located., e.g. at a collection point in their municipality/district.

Safety

Proper use

The lawnmower is only designed to cut small to medium sized lawns in private household gardens and allotments. It is intended solely for private use and not for commercial use.
The lawnmower must not be used:

- to trim bushes, hedges and shrubs,
- to cut and break up plants or grass on roofs or in balcony boxes,
- as a chipper to shred tree and hedge cuttings,
- to level out ground unevenness.

Only use the lawnmower as described in these instructions. Any other use is considered improper and can cause damage to property or even personal injuries. The lawnmower is not a child's toy.

The manufacturer or dealer does not accept liability for any damage caused by improper or incorrect use.

Residual risks

Despite proper use, we cannot guarantee that residual risks that are not obvious will not occur. Due to the type and design of the lawnmower, the following potential dangers may result:

- Cut injuries due to cutting blades that are not covered,
- Injuries due to stones or earth being ejected,
- Safety impairments due to poor visibility or lighting,
- Damage to health, which results from vibrations if the device is used for an extended period or not operated or maintained properly.

Safety instructions

WARNING!

Danger of injury!

Improper use of the lawnmower can cause injuries. The rotating cutting blades can cause severe injuries due to cuts and can even sever body parts. There is also a risk of injury due to objects that are caught by the lawnmower and swung around, as well as due to handling the rechargeable battery incorrectly.

– Important! Read the operating instructions carefully. Familiarise yourself with the controls and the correct use of the machine. Store the user instructions for reference.
– Only start the motor once your feet are at a safe distance from the cutting blades.
– Never insert hands or feet into or under rotating parts.
– Always keep clear of the grass discharge and never reach under the housing. Never reach into the grass discharge even if cut grass is still in there.
– When adjusting the lawnmower, ensure that your fingers cannot be trapped between moving cutting blades and fixed

parts.
- Do not remove the grass collection box when the lawnmower is operating.
- Always wear sturdy shoes and long trousers when using the lawnmower. Never use the lawnmower barefoot or when wearing lightweight sandals.
- Wear protective gloves while using.
- Do not wear loose clothing or clothing with hanging strings or belts.
- Only mow during daylight or with good artificial lighting.
- Do not open the safety flap while operating if working without a grass collection box.
- Avoid working on wet grass, as you may slip.
- The lawnmower must not be tilted when starting the motor unless it has to be lifted for the procedure. If this is the case, only tilt it as far as absolutely necessary and only lift the side that is away from the operator.
- Do not start the lawnmower if you are standing in front of the grass discharge.
- Never use the device faster than walking pace. Do not run when mowing.
- Be extremely careful when turning and pulling the lawnmower towards you.
- Ensure that all nuts, bolts and screws are firmly tightened and that the lawnmower is in a safe working condition.
- Before making changes, always switch the lawnmower off, wait until all parts have come to a complete standstill and cooled down, and remove the safety key.
- Regularly check the grass collection box for wear or loss of efficiency.
- Ensure that the lawnmower is stable, particularly on slopes. Do not mow on excessively steep slopes. Take particular care when changing direction on slopes.

- Mow across the slope and never upwards or downwards.
- Carefully check the surface on which you wish to use the lawnmower and remove any objects that could be caught and ejected (e.g. branches, stones, fallen fruit and other foreign objects including mole hills).
- Never lift or carry the lawnmower when the motor is running. Always switch the lawnmower off when you are carrying it, tilting it or moving it when not on lawns. Wait until all rotating parts have come to a standstill and cooled down completely.
- Do not use the lawnmower if it is damaged or the safety devices are faulty. Only replace damaged or faulty parts with original accessories.
- Never use the lawnmower if safety devices or safety guards are damaged, or without safety devices installed, e.g. baffle plates and/or grass catchers.
- Have worn or damaged notice signs replaced.
- Ensure that other users have been instructed properly, have read the operating manual carefully and understood it.
- Service and clean the lawnmower regularly.
- Be particularly careful when turning the lawnmower around or pulling it towards you.
- Start or actuate the start switch carefully and in accordance with the manufacturer's instructions. Ensure that your feet are at a sufficient distance from the cutting blade(s).
- Allow the motor to cool before switching the machine off.
- When maintaining the cutting blade, be aware that the cutting blade can still move even if the power source is switched off.

WARNING!

Risk of electric shock due to handling the lawnmower improperly!

Faulty electrical installation or too high a mains voltage can cause electric shocks.

- Do not open the lawnmower. Allow specialists to repair it. Contact a specialist workshop for this. Any repairs carried out by you, improper connections or incorrect operation render liability and warranty claims invalid.
- When carrying out repairs, only use parts that correspond to the original device data. The lawnmower contains electrical and mechanical parts that are essential to protect against hazard sources.
- Do not immerse the lawnmower in water or other fluids.
- Keep the lawnmower away from naked flames and hot surfaces.
- Never reach for an electronic device when it has fallen into water.
- Ensure that no metal parts enter the insertion shaft for any rechargeable battery.
- Ensure that children do not insert any objects into the lawnmower.

WARNING!

Dangers for children and people with reduced physical, sensory or mental capacities (such as partially disabled people, old people with limitations to their physical and mental capabilities) or for people with a lack of experience and knowledge (such as older children).

- The lawnmower may only be operated by people over 18 years of age. Local regulations may stipulate a minimum age for operators.
- Never allow children or other persons who are not familiar with the operating instructions to use the lawnmower.
- The lawnmower must not be used by people with limited physical, sensory or mental capabilities, or people with insufficient knowledge or experience unless:
  - they are supervised or guided by a person responsible for them,
  - they have been informed of how to use the lawnmower safely and understand the resulting dangers that are involved.
- Children are not permitted to play with the lawnmower.
- Cleaning and maintenance may not be carried out by children.
- Never mow while other persons, in particular children or animals, are nearby. The minimum distance is 5 metres.
- Do not leave the lawnmower unattended when operating.
- Bear in mind that the operator or user of the machine is responsible for accidents involving other people or their property.
- Never allow children to play with the packaging film. Children can get caught up in this and suffocate when playing.

NOTE!

Risk of damage!

Handling the lawnmower improperly can cause damage.

– The safety devices installed on the lawnmower must not be removed or modified and external safety devices must not be installed.
– Before use, always ensure that the cutting blade, blade screws and the mowing unit are not blunt, worn or damaged. In order to avoid an imbalance, worn out or damaged cutting blades and fastening bolts must be replaced in complete sets.
– Do not use the lawnmower to trim bushes and hedges, as a chipper to shred tree and bush cuttings, or to level out ground unevenness.
– Carefully check the surface on which you wish to use the lawnmower and remove any objects that could damage the lawnmower and the cutting tools, fasteners or the entire cutting unit in particular.
– Ensure that the cutting blades do not come into contact with the ground on uneven surfaces.
– Switch the lawnmower off as soon as you have finished working.
– Stop the cutting blade if the lawnmower has to be tilted to be transported over surfaces other than grass and when moving the lawnmower to and from the surface to be mown.
– Stop the lawnmower, remove the safety key and ensure that all moving parts have come to a complete standstill and have cooled down:
  • whenever you are not using the lawnmower,
  • to clear a blocked cutting blade,
  • to remove blockages from the discharge channel,

- to adjust the cutting height,
- to empty the grass collection box,
- if you encounter a foreign object. Check for damage to the lawnmower and perform the necessary repairs before starting the lawnmower up and working with it again.
- to lift the lawnmower or carry it away,
- to tilt or transport the lawnmower (e.g. from/to the grass or over paths).,
- before you check, clean or carry out any work on the lawnmower.

– If the lawnmower starts to vibrate excessively, a careful inspection is required. Stop the lawnmower immediately and remove the safety key. Ensure that all nuts, bolts and screws are firmly tightened and look for damage. Repair the damaged parts as required.
– Check the lawnmower for damage if it has come into contact with foreign objects.
– Always have damage repaired before using the lawnmower again.
– Never lock the lock bar and the safety switch.
– If you are in any doubt when connecting or operating the lawnmower, contact the customer service department.
– In the event of an accident or machine failure, stop the lawnmower and remove the safety key, then seek assistance if necessary. Only put the lawnmower back into operation once fault-free functionality has been restored and confirmed.

Before first use

Check the lawnmower and the items supplied

NOTE!

Risk of damage!

If the packaging is opened carelessly, the lawnmower may be damaged.

– Do not use any sharp objects when opening.

1. Remove the lawnmower from the packaging.
2. Check whether the contents are complete (see **Fig. A - G**).
3. Check whether the lawnmower or the individual parts is/are damaged. If this is the case, do not use the lawnmower. Contact the manufacturer at the service address specified on the guarantee card.

Assembling the lawnmower

WARNING!

Risk of injury and damage!

Handling the lawnmower improperly can cause injuries and damage.

– Always read and comply with the safety instructions at the start of these operating instructions before assembling the lawnmower.

1. Open the safety cover 9 and pull out the safety key 13 (see **Fig. B**).

The security key must be pushed together slightly to remove it.

2. Close the safety cover again.
3. Push the washers 15 , the quick-release lever 11 from the outside through the holes in the guide bar frame 10 and fold the guide bar frame upwards (see **Fig. C**)

4. Place the guide bar on the guide bar frame in such a way that the holes are aligned at the corresponding height (see **Fig. D**).
5. Push the washers 15 onto the threads of the quick-release levers 11 .
6. Insert the quick-release levers from the outside through the holes in the guide bar and guide bar frame (see **Fig. D**).
7. Insert the bolts 19 from the inside onto the threads of the quick-release levers and turn in the quick-release levers until they can be secured by closing them.
8. Remove the cable clamps 12 from the guide bar frame.
9. Connect the cable 14 to the guide bar frame and replace the cable clamps so that the cable is in the recess.
10. Adjust the guide bar frame to the desired angle and secure it by turning the quick-release lever tight again.

Folding up the guide bar

When transporting or storing the lawnmower, the handlebar can be folded to save space.

1. Fold the quick-release levers 11 upwards.
2. Turn out the quick-release levers so that there is clearance between the guide bar 1 and the guide bar frame 10 .
3. Fold the guide bar upwards.
4. Turn the quick-release levers back in and fold them downwards to fix the guide bar.

Inserting/removing the rechargeable battery

1. Open the battery compartment by lifting the locking mechanism and folding the safety cover 9 upwards (see Fig. **E**).
2. Insert the rechargeable battery by guiding it into the insertion shaft on the rail until it locks in place. The contacts must be pointing downwards.
3. Fold the safety cover shut again.

In order to remove the battery again, you must press the unlocking mechanism 20

Operation

WARNING!

Risk of injury and damage!

Handling the lawnmower improperly can cause serious injuries and damage.

– Always read and comply with the safety instructions at the start of these operating instructions before using the lawnmower.

Adjust cutting height

1. Ensure that the safety key 13 is removed.
2. Push the cutting height adjuster 4 towards the housing and set it to the desired position.

   Lift the lawnmower slightly if required to do so.

   Position 1 is for short grass (25 mm), position 6 is for long grass (75 mm).

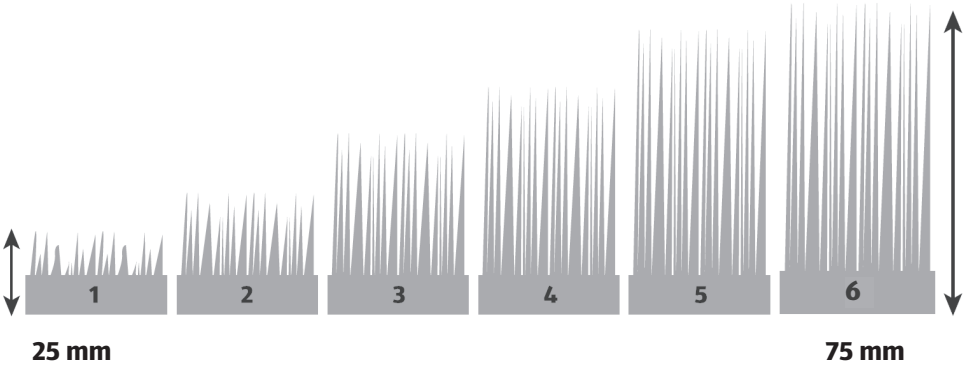

3. Push the cutting height adjuster outwards so that it locks into the required position.

Switching the lawnmower on/off

WARNING!

Risk of injury and damage!

Starting the lawnmower improperly can cause serious injuries and damage.

– Start or actuate the start device carefully and in accordance with the manufacturer's instructions.

1. Insert the safety key 13 into the opening provided until it locks in place.
2. Ensure that lawnmower is at a suitable location and that the cutting blades cannot cause any injuries or damage.
3. To switch on the lawnmower, press and hold the safety button 2 .
4. Lift the safety bar 3 .

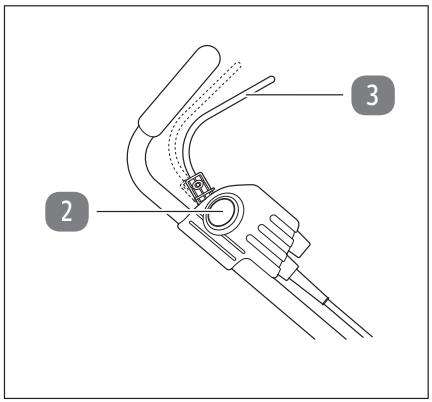

The motor starts and the cutting blades begin to rotate.
The motor runs and the cutting blades rotate as long as the lock bar is raised.
You can let go of the lock button as soon as the motor is running.

5. To switch the lawnmower off again, release the safety bar so that it lowers to its normal position.
   The motor will stop.
6. Wait until all rotating parts have come to a complete standstill.

Using the grass collection box

1. Attach the handle to the grass collector.
2. Put the plastic straps of the grass catcher basket over the grass catcher frame.
3. Ensure that the safety key 13 is removed.
4. Open the safety flap 5 above the grass discharge.
5. Lift the flap and place the grass collection box on the grass discharge. Ensure it is tight.
6. Switch the lawnmower on as described in the “Switching the lawnmower on/off” chapter.

The mown grass is collected in the grass collection box.

Emptying the grass collection box

The fill level indicator 6 is opened by the air flow into the grass collection box 8 when operating. If the fill level indicator remains closed during operation, this means that the grass collection box is full and must be emptied.

1. Stop mowing and switch the lawnmower off.
2. Wait until all rotating parts have come to a complete standstill and the lawnmower has cooled down completely.

   Ensure that the safety key 13 is removed.
3. Remove the grass collection box and shake the grass out.

The lawnmower can also be used without the grass collection box. The mown grass is then spread directly back onto the lawn by the grass discharge. In this case, do not open the safety flap during operation 5 .

Use mulch kit

The mulch insert prevents the grass from being discharged to the rear by blocking the collection chute. This results in the cut grass being distributed over the lawn again during mowing.

1. Open the rear protective cover 5, hold it in this position and slide the mulch kit 16 into the rear discharge chute. Press down and latch. (see Fig. F)
2. Press the bottom part of the handle inwards to release and remove the mulch kit.

Cleaning and maintenance

WARNING

Risk of injury and damage!

Cleaning and maintaining the lawnmower and the rechargeable battery improperly can cause serious injuries and damage.

– Always read and comply with the safety instructions at the start of these operating instructions before cleaning or maintaining the lawnmower or the rechargeable battery.
– All maintenance activities not included in these instructions may only be performed by your dealer. Activities that are not performed by a specialist company, or that are carried out by unqualified persons, will explicitly void the warranty.

NOTE!

Risk of short circuit!

Fluids that have entered the housing can cause a short circuit.

– Never spray the lawnmower with water or a pressure washer and ensure that no water or other fluids enter the housing.

NOTE!

Risk of damage!

Improper cleaning and maintenance can cause damage.

– Do not use any aggressive cleaning agents, brushes with metal or nylon bristles, or any sharp or metallic cleaning items such as knives, hard spatulas, etc. They can damage the surfaces.
– Remove the rechargeable battery before cleaning the lawnmower.
– Clean the housing and the grass discharge thoroughly after each use and allow

all parts to dry properly. Otherwise, damp grass residues may harden or start to get mouldy and are then difficult to remove.

- Remove all grass residues using a brush.
- Clean all smooth surfaces with a damp cloth.
- Treat all moving parts with environmentally friendly oil.
- Check the grass collection box regularly for wear or loss of efficiency.
- Regularly ensure that all nuts, bolts and screws are firmly tightened and that the lawnmower is in a safe working condition.
- Replace parts that are worn out or damaged.

Replacing the cutting blade

CAUTION!

Danger of injury!

Improper maintenance can cause injuries.

- When adjusting the lawnmower, ensure that your fingers cannot be trapped between the moving cutting blade and fixed parts.
- Always wear safety gloves when handling the cutting blade.
- When maintaining the cutting blade, be aware that it can still move even if the power source is switched off.
- Only replace the cutting blade with an original spare part (see the “Spare parts list” chapter).

Damaged and worn cutting blades must no longer be used and must be replaced with manufacturer’s original spare parts. Regularly check whether the cutting blade is blunt or damaged. Proceed as follows to replace:

1. Ensure that all rotating parts have come to a complete standstill and that the lawnmower has cooled down.
2. Remove the safety key 13 and remove the battery.
3. Turn the lawnmower onto its side.
4. Use a screwdriver to unscrew the fastening screw 17 and remove it together with the washer (see **Fig. G**).
5. Remove the cutting blade 18 .
6. Place a new cutting blade on the drive plate .

7. Place the washer and fastening screw back onto the cutting blade and tighten them.

– Before using again, ensure that the new cutting blade is attached correctly and is tight.

Devices with inserted or enclosed rechargeable batteries as well as individual rechargeable batteries may only be shipped in exceptional cases and after prior consultation with the service department on the telephone number indicated on the guarantee card.

Transport and storage

WARNING!

Risk of injury and damage!

Transporting the lawnmower and any rechargeable battery improperly can cause injuries and damage.

– When transporting the lawnmower by car, it must be positioned so that it poses no danger, and secured.

– In order to prevent any battery discharging fully, charge it completely before an extended storage period.

– When transporting or storing any battery, mask the contacts or pack the battery in a plastic bag or box.

– Before transporting and storing, ensure that all parts are completely dry.

– If necessary, release the quick clamps and fold the guide bar 1 and the guide bar frame 10 together carefully.

– Always store the lawnmower and any battery in a dry place.

– Protect the lawnmower and the battery from direct sunlight.

– Keep the lawnmower and any battery inaccessible to children, safely locked away and at a storage temperature between +5 °C and +20 °C.

Troubleshooting

Fault	Possible cause	Rectification
The motor does not start.	The rechargeable battery is empty.	Charge the battery (see the “Charging the batteries” chapter).
	The rechargeable battery is faulty.	Replace the rechargeable battery. To do this, contact the manufacturer at the service address specified on the guarantee card.
	The safety key is not inserted.	Insert the safety key (see the “Switching the lawnmower on/ off” chapter).
	The safety bar was lifted without pressing the safety button.	Press and hold the lock button when lifting the lock bar (see the “Switching the lawnmower on/ off” chapter).
The lawnmower runs jerkily or vibrates heavily.	The cutting blade is damaged.	Replace the cutting blade (see the “Replacing the cutting blade” chapter).
	The cutting blade is loose.	Check that the cutting blade is tight and, if necessary, tighten the fastening screw (see the “Replacing the cutting blade” chapter).
The mowing performance is poor.	The cutting blade is blunt.	Replace the cutting blade (see the “Replacing the cutting blade” chapter).
	The rechargeable battery is faulty.	Replace the rechargeable battery To do this, contact the manufacturer at the service address specified on the guarantee card.
	The cutting height is not suitable for the grass height.	Set a more suitable cutting height (see the “Adjust cutting height” chapter).

The mown grass is not collected correctly.	The grass collection box is blocked.	Remove the grass collection box and empty it (see the “Emptying
	The grass discharge is blocked.	Clean the grass discharge with a long brush or a similar, suitable item.
	The grass is too wet.	Only mow dry grass.

Technical data

Lawn mowers

Model	FS-ARM 4040
Article number	805731
Nominal speed	3500 rpm
Cutting width	400 mm
Height adjustment	25–75 mm / 6 positions
Collection box volume	45 L
Weight	13,3 kg
Voltage	40 V⎓ (Direct current)
Protection category	IPX1
Measured sound power level L_{WA} (2000/14/EC)	89,06 dB (A); K=0,79 dB(A)
Guaranteed sound power level L_{WA} (2000/14/EC)	96 dB (A)
Sound pressure level L_{pA} (EN 60335-2-77)	77,6 dB (A); K=3,0 dB(A)
Vibration a_h (EN 60335-2-77)	2,8 m/s^2; K=1,5 m/s^2
Protection class	III

Suitable rechargeable batteries

Model	AEB 2040-2.5I, AEB 2040-2.5N, XYZ562
Battery type	Li-Ion
Max. voltage	40 V
Capacity	2 500 mAh
Charging time	approx. 95 mins.

Charger

Model	AEC 20-4.0Ia, AEC 20-4.0Na, XYZ563
Nominal input power	220-240 V~/50 Hz/96 W
Nominal output power	21 V / 4,0 A
Protection class	II

A battery and charger are not included in the lawn mower's delivery contents, they must be purchased separately.

Warning: The vibration emissions value specified has been measured using a standardised test procedure. The actual vibration emissions value may differ from the specified value depending on the type and method of application.

The vibration level can be used to compare electric tools with each other. It is suitable for a preliminary evaluation of the vibration load.

Try to keep the stress due to vibration as low as possible. For example, measures to reduce vibration stress are wearing gloves when using the tool and limiting the work time. All phase of the operating cycle must be considered in this regard, (for example, times when the power tool is switched off, and times when the power tool is switched on but is not running under load).

Spare parts list

If you need accessories or spare parts, please contact our service department. When working with this tool, do not use any accessory parts other than those recommended by our company. Otherwise the operator or others in the vicinity could suffer serious injuries, or the tool could be damaged.

When ordering spare parts, provide the following information:

- Device type
- Device article number
- Cutting blade, Art.-Nr.: 77010599

The lawnmower is supplied without batteries or a charger, which must be purchased separately:

The lawnmower can be operated with the Activ Energy 20/40V battery pack.

Only use the battery specified in the “Technical data” chapter for the lawnmower, do not operate the lawnmower with batteries from other manufacturers.

Repair service

Repairs to electrical tools may only be performed by an electrician. Please describe the fault that you have encountered when sending the machine in for repair.

IKRA mogatec tools for home and garden
Fon +49 6071-3003-0
Fax +49 6071-3003-30
Mail info@ikra.de
Web www.ikramogatec.com

EC Declaration of Conformity

We, Mogatec Moderne Gartentechnik GmbH, Im Grund14, D-09430 Drebach, Germany
hereby declare that the product

Cordless lawnmower

FS-ARM 4040 Ferrex

40 V DC / cutting width 400 mm

to which this declaration refers, complies with the relevant essential health and safety requirements of the EC Directive **2006/42/EC (Machinery Directive), 2000/14/EC+2005/88 EC (Noise Directive), 2014/30/EU (EMC Directive), 2011/65/EU (RoHS Directive)** as well as the requirements of the other relevant EC Directives and their amendments.

The following standard(s) and/or technical specification(s) was/were applied to ensure that the health and safety requirements specified in the EU directives were implemented properly:
EN 60335-1: 2012+A11+A13+A1+A14+A2; EN 60335-2-77:2010; EN 55014-1:2017;
EN 55014-2: 2015; EN 50581:2012; AfPS GS 2019:01 PAK

The sole responsibility for drawing up this declaration of conformity lies with the manufacturer.

The object of the declaration described above complies with the provisions of Directive 2011/65/EU of the European Parliament and of the Council of 8 June 2011 on the restriction of the use of certain hazardous substances in electrical and electronic equipment.

Measured sound power level: 89,06* dB(A)
Guaranteed sound power level: 96* dB(A)

Conformity assessment procedure in accordance with Annex VI / Directive 2000/14/EC

* Notified Body: TÜV Rheinland LGA Products GmbH (Notified Body number: NB 0197)
Tillystraße 2, 90431, Nürnberg, Germany

The year of manufacture is printed on the nameplate and can be additionally retrieved via the consecutive serial number.

Münster, 23.12.2020

Matthias Fiedler, Senior Product Manager Mogatec GmbH

Storage of technical documentation:
Ikra GmbH, Matthias Fiedler, 36, 64839 Münster, Germany

MOGATEC Moderne Gartentechnik GmbH,
Matthias Fiedler
Im Grund 14,
09430 Drebach, GERMANY

Disposal

Disposal of packaging

Dispose of the packaging sorted by type. Add cardboard and cardboard to the waste paper, plastic films to the recycling collection.

Disposal of the lawnmower

(Applicable in the European Union and other European countries with separate collection systems for recyclable materials)

Old devices must not be disposed of with household waste!
If the lawnmower can no longer be used, please ensure that the lawnmower is disposed of separately to normal household waste, e.g. at a collection point in your area. This ensures that old devices are recycled professionally and any adverse effects on the environment are avoided. For this reason, electrical devices are marked with the symbol shown here.
Batteries do not belong in household waste. As a consumer, you are legally obligated to return used primary and rechargeable batteries. At the end of the service life of your device, the primary batteries or rechargeable batteries must be removed and disposed of separately. You can dispose of your used primary and rechargeable batteries at your local municipal waste collection point, or hand them in to your dealer or retailer.